On structure signatures and probability signatures of general decomposable systems

J.-L. Marichal, P. Mathonet, F. Spizzichino

Mathematics Research Unit, FSTC, University of Luxembourg, Luxembourg
University of Liege (ULg), Faculty of sciences, Department of Mathematics
Department of Mathematics, University La Sapienza, Rome, Italy

7th International Workshop on Applied Probability
June 16th, 2014

Coherent systems : notation

- $C = \{c_1, \ldots, c_n\}$: n binary components (two possible *states*);
- they are connected to form a system;
- Basic examples : series, parallel, bridge, k-out-of-n systems.

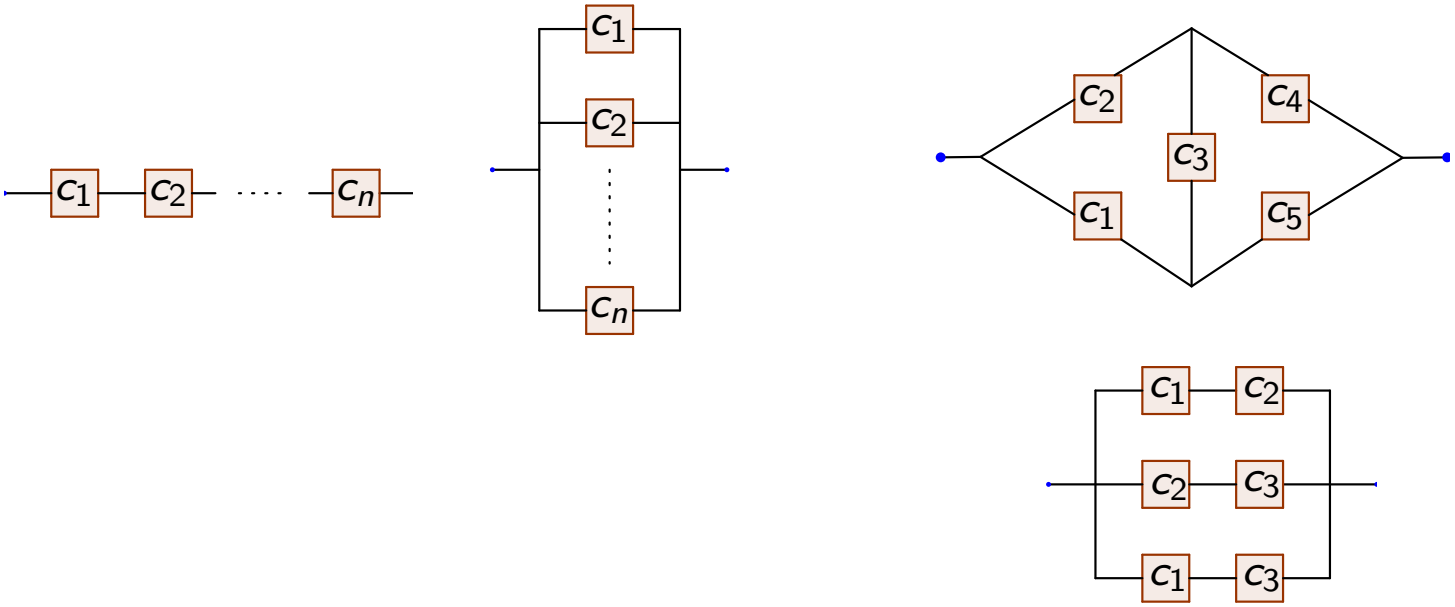

Structure functions

- With each component c_k, ($k \in [n] = \{1, \ldots, n\}$), we associate a *Boolean variable*

$$x_k = \begin{cases} 0 & \text{if } c_k \text{ is in a failed state} \\ 1 & \text{if } c_k \text{ is in function.} \end{cases}$$

  The Boolean vector $\mathbf{x} = (x_1, \ldots, x_n)$ encodes the states of all components.
- We can also consider the set A of components in function : $\mathbf{x} = (1, 0, 1, 0, 1)$ corresponds to $A = \{1, 3, 5\}$.
  So the states are represented by $\mathbf{x} \in \{0, 1\}^n$ or $A \subset [n] = \{1, \ldots, n\}$.
- The *structure function* defines the state of the system :

$$\phi : \{0, 1\}^n \to \{0, 1\} : \mathbf{x} = (x_1, \ldots, x_n) \mapsto x_S = \phi(x_1, \ldots, x_n).$$

Examples

The structure function can be defined with $\wedge$ and $\vee$ or as a polynomial function.

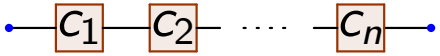

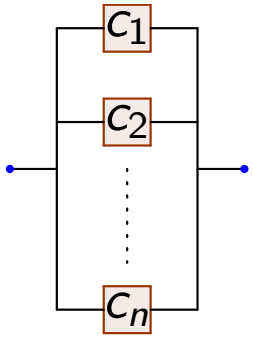

$$\phi(x_1, \ldots, x_n) = x_1 \cdots x_n \qquad \phi(x_1, \ldots, x_n) = 1 - (1 - x_1) \cdots (1 - x_n)$$

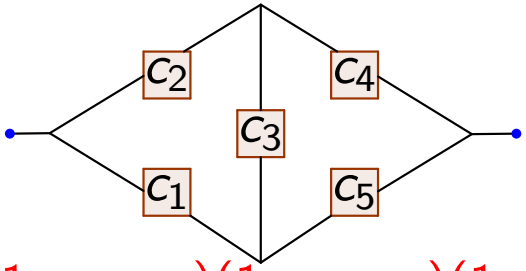

$$\phi(x_1, \ldots, x_5) = 1 - (1 - x_2x_4)(1 - x_1x_5)(1 - x_2x_3x_5)(1 - x_1x_3x_4).$$

This function can be extended as a polynomial $\widehat{\phi} : \mathbb{R}^n \to \mathbb{R}$, of degree at most 1 in each variable. This is the multilinear extension of ϕ.

Properties of ϕ

- $\phi : \{0,1\}^n \to \{0,1\}$ or $\phi : \mathcal{P}([n]) \to \{0,1\}$;
- $\phi(0,\ldots,0) = \phi(\varnothing) = 0$;
- $\phi(1,\ldots,1) = \phi([n]) = 1$;
- ϕ is increasing (nondecreasing) :

$$A \subset B \Rightarrow \phi(A) \leqslant \phi(B).$$

Every function with these properties is the structure function of a semi-coherent system.
This system is coherent if in addition, all the variables are *essential* in ϕ.
Example : a *k-out-of-n system* is a system that fails with the k-th failure :

$$\phi(A) = 1 \quad \text{iff} \quad |A| > n - k.$$

or $\phi(\mathbf{x}) = x_{k:n}$ (series are 1-out-of-n, parallel are n-out-of-n).

Some notation concerning probability

1. T_k : random lifetime of component c_k.
2. For $t > 0$, $X_k(t)$: rand. state of comp. c_k at time t (Bernoulli var.).
3. T_S : system random lifetime.
4. $X_S(t)$: random state of the system at time t (Bernoulli var.).
5. Joint cumulative distribution of component lifetimes :

$$F(t_1, \ldots, t_n) = \Pr(T_1 \leqslant t_1, \ldots, T_n \leqslant t_n).$$

So in general a system is a triple :

$$\mathcal{S} = (n, \phi, F).$$

Classical hypotheses :

- F is absolutely continuous; the lifetimes are i.i.d.
- or the lifetimes are exchangeable;
- or ties have null probability (no ties) :

$$\Pr(T_k = T_\ell) = 0, \quad \text{when } k \neq \ell.$$

Structure Signature

The random variables $T_1, \ldots, T_n$ induce the order statistics $T_{1:n}, \ldots, T_{n:n}$, such that (when there are no ties)

$$T_{1:n} < \ldots < T_{n:n}.$$

Consider a system $\mathcal{S} = (n, \phi, F)$, where F is absolutely continuous i.i.d.

Definition (Samaniego (1985))

The *structure signature* of the system (or *Samaniego signature*) is the n-tuple

$$\boldsymbol{s} = (s_1, \ldots, s_n)$$

where

$$s_k = \Pr(T_S = T_{k:n}).$$

Remark : it is not the Barlow index $(b_1, \ldots, b_n)$ where

$$b_k = \Pr(T_S = T_k).$$

Theorem : the signature $\boldsymbol{s}$ does not depend on F (in the i.i.d. situation), but only on the structure. It is a combinatorial object.

Examples

For a series system : $\boldsymbol{s} = (1, 0, \ldots, 0)$.
For a parallel system : $\boldsymbol{s} = (0, \ldots, 0, 1)$.
The signature of a more complex system:

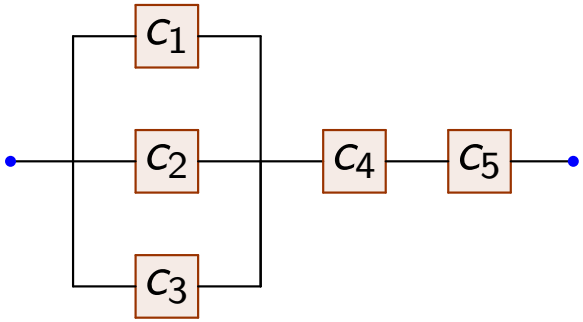

$$\boldsymbol{s} = \left(\tfrac{48}{120}, \tfrac{36}{120}, \tfrac{36}{120}, 0, 0\right)$$

Why ? All the events

$$E_\sigma = \left(T_{\sigma(1)} < T_{\sigma(2)} < T_{\sigma(3)} < T_{\sigma(4)} < T_{\sigma(5)}\right)$$

where σ is a permutation of $\{1, 2, 3, 4, 5\}$ are *equally likely*. Since there are no ties :

$$\Pr\left(T_{\sigma(1)} < T_{\sigma(2)} < T_{\sigma(3)} < T_{\sigma(4)} < T_{\sigma(5)}\right) = \frac{1}{120}.$$

We just have to count the number of these events that correspond to the event $(T_S = T_{k:5})$.

How to compute : Boland's formula

Proposition (Boland (2001))

If the components have i.i.d. lifetimes, we have for $k \leqslant n$

$$s_k = \frac{1}{\binom{n}{n-k+1}} \sum_{|A|=n-k+1} \phi(A) - \frac{1}{\binom{n}{n-k}} \sum_{|A|=n-k} \phi(A)$$

where for $A \subset [n]$, $|A|$ is the cardinality of A.

Both terms that appear in the formula have a meaning :

$$\overline{S}_k = \frac{1}{\binom{n}{n-k}} \sum_{|A|=n-k} \phi(A) \;=\; \sum_{i=k+1}^{n} s_i = \Pr(T_S > T_{k:n}).$$

It is the kth component of the *tail structure signature*.
It can be extended (for convenience) with $\overline{S}_0 = 1$ and $\overline{S}_n = 0$. We then have

$$s_k = \overline{S}_{k-1} - \overline{S}_k, \quad \forall\, k : 1 \leqslant k \leqslant n.$$

Some more examples

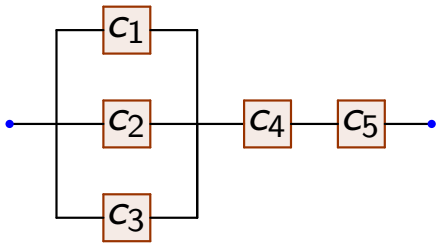

We have $\overline{S}_0 = 1, \overline{S}_1 = \frac{3}{5}, \overline{S}_2 = \frac{6}{20}, \overline{S}_3 = \overline{S}_4 = \overline{S}_5 = 0$, so

$$\boldsymbol{s} = (1 - \frac{3}{5}, \frac{3}{5} - \frac{6}{20}, \frac{6}{20} - 0, 0 - 0, 0 - 0) = (\frac{48}{120}, \frac{36}{120}, \frac{36}{120}, 0, 0)$$

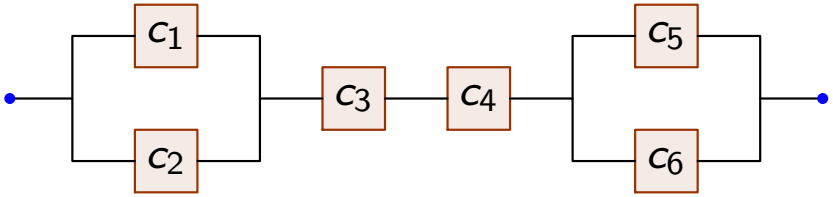

We have $\overline{S}_0 = 1$, $\overline{S}_1 = \frac{2}{3}$, $\overline{S}_2 = \frac{8}{30}$, $\overline{S}_3 = \overline{S}_4 = \overline{S}_5 = \overline{S}_6 = 0$.

Use : Samaniego's decomposition of reliability

The reliability is $R(t) = \Pr(T_S > t)$. Set $R_{k:n}(t) = \Pr(T_{k:n} > t)$.

Proposition (Samaniego (1985))

If F is absolutely continuous and i.i.d. , then

$$R_S(t) = \sum_{k=1}^{n} s_k \, R_{k:n}(t), \tag{1}$$

for all $t > 0$, and every coherent system $\mathcal{S} = (n, \phi, F)$.

- Use : Comparison of systems built with the same components.
- Proofs : Samaniego used probabilities, but it's also simple algebra.
- First extensions : Navarro-Rychlik (2007) for exchangeable components.
- Marichal,M. , Waldhauser (2011) : This decomposition holds for every coherent structure ϕ if and only if the state variables $X_1(t), \ldots, X_n(t)$ are exchangeable.

The general (non i.i.d.) setting

For a system $\mathcal{S} = (n, \phi, F)$ such that F has no ties, we can define

- The structure signature $\boldsymbol{s}$ (through Boland's formula);
- The probability signature $\boldsymbol{p}$, defined as above (Navarro et al. 2010):

$$\boldsymbol{p} = (p_1, \ldots, p_n),$$

  where

$$p_k = \Pr(T_S = T_{k:n}).$$

- The probability signature may depend both on F and ϕ.

Can we find an explicit expression of p_k in terms of F et ϕ, for instance by generalizing Boland's formula ?

Expression of $\boldsymbol{p}$ and the relative quality function

The *relative quality function* is defined by

$$q : \mathcal{P}([n]) \to \mathbb{R} : A \mapsto q(A) = \Pr\left(\max_{k \notin A} T_k < \min_{j \in A} T_j\right),$$

and $q(\varnothing) = q([n]) = 1$. So $q(A)$ measures the quality of elements of A.

Proposition (Marichal,M. (2011))

If F has no ties, then the probability signature is given by

$$p_k = \sum_{|A|=n-k+1} q(A)\,\phi(A) - \sum_{|A|=n-k} q(A)\,\phi(A).$$

Here again both terms have a direct meaning

$$\overline{P}_k = \sum_{|A|=n-k} q(A)\,\phi(A) \;=\; \sum_{i=k+1}^{n} p_i \;=\; \Pr(T_S > T_{k:n})$$

is the k-th coordinate of the *tail probability signature*.
When F is i.i.d. we have $q(A) = \frac{1}{\binom{n}{|A|}}$.

Modular decomposition of the structure

A modular decomposition of $([n], \phi, F)$ into r disjoint modules is

- a partition $\mathcal{C} = \{C_1, \ldots, C_r\}$ of $[n]$;
- for every j, a semi-coherent system $M_j = (C_j, \chi_j, G_j)$, where G_j is the marginal distribution of the components in C_j;
- the modules are connected according to a structure function $\psi\colon \{0,1\}^r \to \{0,1\}$ such that

$$\phi(A) \;=\; \psi(\chi_1(A \cap C_1), \ldots, \chi_r(A \cap C_r)), \qquad A \subseteq C, \tag{2}$$

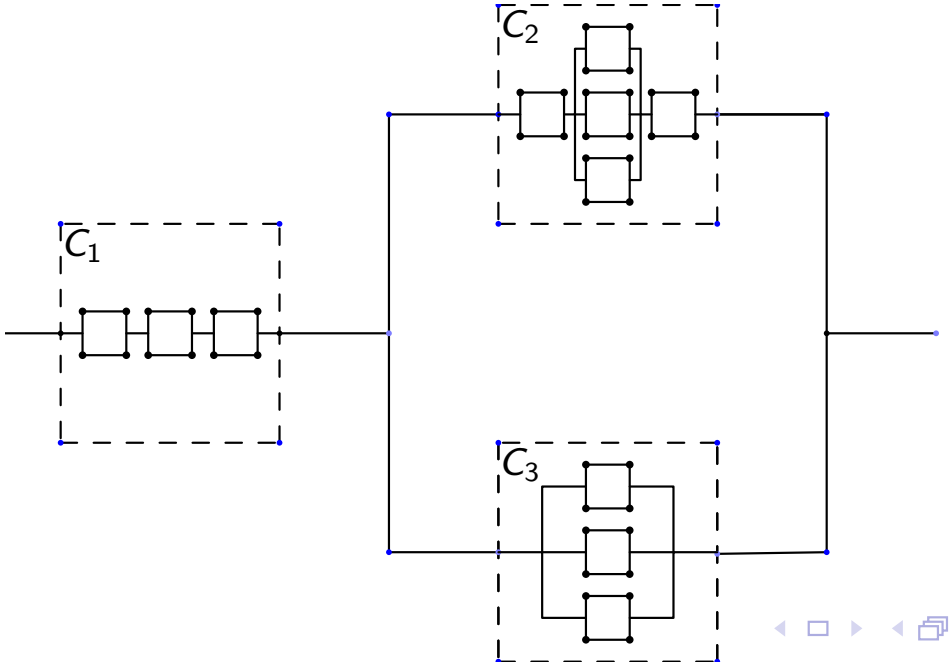

Modular decomposition of the structure signature $\boldsymbol{s}$

Question : does the structure signature of a modular system decompose in terms of the signatures of the modules and the organizing structure ψ ?

- A known result, expressed in terms of the tail signature :

Theorem (Gertsbakh, Shpungin, Spizzichino (2011))

For two modules C_1 and C_2 of size n_1 and n_2 connected in series, we have

$$\overline{S}_{n-k} = \sum_{\substack{0 \leqslant a_1 \leqslant n_1,\ 0 \leqslant a_2 \leqslant n_2 \\ a_1 + a_2 = k}} \frac{\binom{n_1}{a_1}\binom{n_2}{a_2}}{\binom{n}{k}} \overline{S}^1_{n_1 - a_1} \overline{S}^2_{n_2 - a_2} .$$

- The same kind of formula holds for a parallel of two modules;
- Independent results in the same direction by Da, Zheng and Hu (2012);

Modular decomposition of $\boldsymbol{s}$: general result

For r modules of $C_1, \ldots, C_r$ of size $n_1, \ldots, n_r$ we set

$$\mathcal{T}_k \;=\; \{\mathbf{a} = (a_1, \ldots, a_r) \in \mathbb{N}^r : 0 \leqslant a_j \leqslant n_j \text{ for } j = 1, \ldots, r \text{ and } \textstyle\sum_{j=1}^r a_j = k\}.$$

and for every $\mathbf{a} \in \mathcal{T}_k$:

$$c_0(a_1, \ldots, a_r) \;=\; \frac{\binom{n_1}{a_1} \cdots \binom{n_r}{a_r}}{\binom{n}{k}}\,.$$

Theorem (Marichal,M.,Spizzichino (submitted))

For every semi-coherent system (C, ϕ) with a modular decomposition into r disjoint modules (C_j, χ_j), $j = 1, \ldots, r$, connected according to a semi-coherent structure ψ, we have (without assumption)

$$\overline{S}_{n-k} \;=\; \sum_{\mathbf{a} \in \mathcal{T}_k} c_0(\mathbf{a})\, \widehat{\psi}\big(\overline{S}^1_{n_1-a_1}, \ldots, \overline{S}^r_{n_r-a_r}\big), \qquad 0 \leqslant k \leqslant n. \tag{3}$$

Here $\widehat{\psi}$ is the multilinear extension of ψ.

Decomposability of q

The hypotheses for the decomposition :

Definition

Denote by q^{C_j} the relative quality function associated with module C_j :

$$q^{C_j}(A) \;=\; \Pr\Big(\max_{i\in C_j\setminus A} T_i < \min_{i\in A} T_i\Big)\,, \qquad A\subseteq C_j\,.$$

Definition

Given a partition $\mathcal{C}=\{C_1,\ldots,C_r\}$ of C, the relative quality function q is $\mathcal{C}$-decomposable if there exists a function $c:\prod_{i=1}^r\{0,\ldots,n_i\}\to\mathbb{R}$ such that

$$q(A) \;=\; c(|A\cap C_1|,\ldots,|A\cap C_r|)\prod_{j=1}^{r} q^{C_j}(A\cap C_j)\,, \qquad A\subseteq C\,. \tag{4}$$

Remark : This is a condition on the component lifetimes.

Modular decomposition of $\boldsymbol{p}$

Recall the tail signature $\overline{P}_k = \sum_{i=k+1}^{n} p_i = \Pr(T_S > T_{k:n})$ for $0 \leqslant k \leqslant n-1$, $\overline{P}_0 = 1$ and $\overline{P}_n = 0$.

Theorem (Marichal,M.,Spizzichino (submitted))

If the relative quality function q is $\mathcal{C}$-decomposable for some partition $\mathcal{C} = \{C_1, \ldots, C_r\}$ of C, then for every semi-coherent system (C, ϕ, F) with a modular decomposition into (C_j, χ_j, G_j), $j = 1, \ldots, r$, connected according to $\psi\colon \{0,1\}^r \to \{0,1\}$, we have

$$\overline{P}_{n-k} = \sum_{\mathbf{a} \in \mathcal{T}_k} c(\mathbf{a})\, \widehat{\psi}\big(\overline{P}^1_{n_1-a_1}, \ldots, \overline{P}^r_{n_r-a_r}\big), \qquad 0 \leqslant k \leqslant n. \tag{5}$$

Ad hoc hypothesis ?

Theorem (Marichal,M.,Spizzichino (submitted))

Consider a partition $\mathcal{C} = \{C_1, \ldots, C_r\}$ *of* C *and a distribution* F *of the component lifetimes. Assume that there exists a function* $\gamma\colon \prod_{j=1}^{r}\{0, \ldots, n_j\} \to \mathbb{R}$ *such that, for every semi-coherent system* (C, ϕ, F) *with a modular decomposition into* r *disjoint modules* (C_j, χ_j, G_j), $j = 1, \ldots, r$, *connected according to a semi-coherent structure* $\psi\colon \{0,1\}^r \to \{0,1\}$, *we have*

$$\overline{P}_{n-k} = \sum_{\mathbf{a}\in\mathcal{T}_k} \gamma(\mathbf{a})\, \widehat{\psi}\big(\overline{P}^{1}_{n_1-a_1}, \ldots, \overline{P}^{r}_{n_r-a_r}\big)\,. \tag{6}$$

Then the relative quality function q *associated with* F *is* $\mathcal{C}$*-decomposable.*

Some cases where q is $\mathcal{C}$-decomposable

- If q and q^{C_j} are symmetric, then it is q $\mathcal{C}$-decomposable for every $\mathcal{C}$, but then $\boldsymbol{p} = \boldsymbol{s}$.
- This happens when the values $p_\sigma = \Pr(T_{\sigma(1)} < \cdots < T_{\sigma(n)})$ are equal to $\frac{1}{n!}$.

Definition

The function $q\colon 2^C \to \mathbb{R}$ is *$\mathcal{C}$-symmetric* for a partition $\mathcal{C} = \{C_1, \ldots, C_r\}$ if $q(A) = q(B)$ for every $A, B \subseteq C$ such that $|A \cap C_j| = |B \cap C_j|$ for every $j \in [r]$.

- If the function q is $\mathcal{C}$-symmetric for some partition $\mathcal{C} = \{C_1, \ldots, C_r\}$ and the functions q^{C_j} are symmetric for $j = 1, \ldots, r$, then q is $\mathcal{C}$-decomposable.

Decomposable systems

Modular decomposition of ϕ and corresponding decomposability of q both play a role, so we propose a new definition :

Definition

We say that a semicoherent system (C, ϕ, F) is *decomposable* if, for some partition $\mathcal{C} = \{C_1, \ldots, C_r\}$ of C,

(i) the structure $\phi\colon \{0,1\}^n \to \{0,1\}$ has a modular decomposition into r disjoint semicoherent modules (C_j, χ_j, G_j), $j = 1, \ldots, r$, and

(ii) the function q is $\mathcal{C}$-decomposable.

For decomposable systems, the signatures both admit a modular decomposition.

Final remarks

- We can make the same computations for the Barlow-Proschan index (2012);
- We have a simple analytic method to compute $\boldsymbol{s}$ in terms of ϕ (i.i.d. case only) (2012);
- The structure signature can be defined in a purely geometric way (2011), (least squares).

Thank you.

A word about the proof

- Use the multilinear extension of ψ to obtain

$$\begin{aligned}\overline{S}_{n-k} &= \sum_{|A|=k} q_0(A)\phi(A) = \sum_{|A|=k} q_0(A)\,\psi\big(\chi_1(A\cap C_1),\ldots,\chi_r(A\cap C_r)\big)\\ &= \sum_{B\subseteq[r]} \psi(B) \sum_{|A|=k} q_0(A) \prod_{j\in B}\chi_j(A\cap C_j) \prod_{j\in[r]\setminus B}(1-\chi_j(A\cap C_j))\,.\end{aligned}$$

  where $q_0(A) = 1/\binom{n}{|A|}$.

- Decompose q_0 in terms of c_0 and $q_0^{C_j}$, $j \leqslant r$.
- Arrange the sums in a suitable way (easy since we have products).
- Use the fundamental property of q_0 and $q_0^{C_j}$:

$$\sum_{A\subseteq C,|A|=k} q_0(A) = 1 \qquad \sum_{A_j\subseteq C_j,|A_j|=a_j} q_0^{C_j}(A_j) = 1.$$

Decomposition of reliability

How to extend Samaniego's decomposition ?

Proposition (Samaniego (1985))

If F is absolutely continuous and i.i.d. , then

$$R_S(t) = \sum_{k=1}^{n} s_k \, R_{k:n}(t),$$

for all $t > 0$, and every coherent system $\mathcal{S} = (n, \phi, F)$.

In the i.i.d. case we have $\boldsymbol{p} = \boldsymbol{s}$, so the decomposition also writes

$$R_S(t) = \sum_{k=1}^{n} p_k \, R_{k:n}(t). \tag{7}$$

Some questions

Assume that F has no ties.

1. Find necesary and sufficient conditions (on F) so that

$$R_S(t) = \sum_{k=1}^{n} s_k \, R_{k:n}(t),$$

holds for every system and all $t > 0$.

2. Find necesary and sufficient conditions so that

$$R_S(t) = \sum_{k=1}^{n} p_k \, R_{k:n}(t),$$

holds for every system and all $t > 0$.

3. Find necesary and sufficient conditions so that

$$\mathbf{s} = \mathbf{p},$$

holds for every system.

Sufficient conditions (e.g. i.i.d. or exchangeability) are known.

Necessary and sufficient conditions I

For every $t > 0$, the state variables $X_k(t)$ are defined by

$$X_k(t) = \mathrm{Ind}(T_k > t).$$

Theorem (Marichal, M., Waldhauser (2011))

For every $t > 0$, (Samaniego) decomposition

$$R_S(t) = \sum_{k=1}^{n} s_k \, R_{k:n}(t)$$

holds for every coherent structure ϕ if and only if the state variables $X_1(t), \ldots, X_n(t)$ are exchangeable.

The condition is weaker than exchangeability of component lifetimes.

Necessary and sufficient conditions II

Theorem (Marichal,M.,Waldhauser (2011))

For every $t > 0$, decomposition

$$R_S(t) = \sum_{k=1}^{n} p_k \, R_{k:n}(t)$$

holds for every coherent structure ϕ iff

$$\Pr(\boldsymbol{X}(t) = \mathbf{x}) \;=\; q(\mathbf{x}) \Big(\sum_{|\mathbf{z}|=|\mathbf{x}|} \Pr(\boldsymbol{X}(t) = \mathbf{z}) \Big),$$

where $\boldsymbol{X}(t) = (X_1(t), \ldots, X_n(t))$.

Equality of **s** and **p**

Proposition (Marichal,M.,Waldhauser (2011))

We have $\mathbf{p} = \mathbf{s}$ *for every coherent structure* ϕ *if and only if* q *is symmetric.*

All the new results in this talk are in one of the following papers.

- J.-L. Marichal, P. M., *Extension of system signatures for dependent lifetimes: Explicit expressions and interpretations*, Journal of Multivariate analysis, 102, 931–936 (2011);
- J.-L. Marichal, P. M., *Symmetric approximations of pseudo-Boolean functions with applications to influence indexes*; Applied Mathematics Letters (2012);
- J.-L. Marichal, P. M., T. Waldhauser, *On signature-based expressions of system reliability*, Journal of Multivariate analysis, 102 (10), 1410–1416 (2011);
- J.-L. Marichal, P. M., F. Spizzichino, *On modular decompositions of system signatures*, submitted;
- J.-L. Marichal, P. M., *Computing system signatures through reliability functions*, Statistics & Probability Letters 83 (3), (2013);
- J.-L. Marichal, P. M., *On the extensions of Barlow–Proschan importance index and system signature to dependent lifetimes*, Journal of Multivariate analysis 115, (2013).
- Everything is on the ArXiv.